Genesis
Super Trucks

User Manual

Note
This unit is fitted with an updated (2013) design for console steering and forward/reverse. Please quote 'OPTICAL' set up when discussing parts or service. For parts, page 111G has substitutions for items 3 and 31. New part numbers to be advised shortly.

Self tuning loop output board fitted to this unit

Your Serial Number is:

Please quote this number when ordering parts or seeking telephone assistance.

Company Information.

	Telephone	
Technical Help	+44(0)121-773-1827	Ask for Technical Help
Parts & Accessories	+44(0)121-773-1827	Ask for the Parts Dept
Unit Sales	+44(0)121-773-1827	Katie Roberts
Comments:	+44(0)121-773-1827	Stuart Bland

Addresses:

Head Office, Sales Office & Production

Tornado International Ltd
Unit 20 Stirchley Trading Estate
Hazelwell Road
Stirchley
Birmingham
B30 2PF
England
Tel: (0)121-773-1827
Email: sales@tornado-uk.com

A Member of the Tornado International Leisure Group

Conventions used in this Manual

For clarity the following conventions are used in this manual:

Paragraph Heading	Meaning
Tip!	Information which will assist in the operation of the product
Note!	Information which is important for the correct operation *of the product.*
Caution!	Information which is **VITAL** to avoid injury to persons or damage to the product.
Warning!	Information which is **VITAL** to avoid ***serious injury*** to personnel or the public.

Please take note of the information in shaded areas. If you have any questions with regard to the correct installation or operation of the product please contact Tornado International Ltd.

Important – Please Read This!
This manual is provided in good faith and is believed to be accurate. Because Tornado International have no control over the manner in which the product is used, users should satisfy themselves that any information or instruction contained in this manual is appropriate for the conditions under which the product is being installed and operated.

In the interest of product development, Tornado International reserves the right to alter or modify the product as necessary.

Introduction

Thank you for purchasing this quality product from Tornado International Ltd. It will give you many years of trouble free service and if used in a suitable site will provide consistent profits.

Please read and understand this manual before using the equipment.

This manual contains the following sections.

1.00 Operating Procedures

1.01 Opening Instructions
1.02 Closing Instructions

2.00 Detail Overview of the System

Here you will find detailed information about each part of the system with hints and cautions about the correct operation of the equipment.

3.00 Periodic Service

Little is required in the way of periodic service. However time spent in following these procedures will pay dividends in improved reliability and service life.

1.00 Operating Procedures

1.01 Opening Instructions

1. Remove the console covers; visually check the consoles for any damage.
2. Turn the Power Supply on and check that the red lights are illuminated on each playing position.

   Note!
   The power supply must always be turned on before the batteries are connected to the models.
3. Check the charge meters on the battery chargers. The needle should be between 0 & 1 when the battery is fully charged.
4. Remove the batteries from the chargers and connect the spare batteries if they are not fully charged.
5. With the model near to the operating area, insert the battery into the model and refit the battery retaining strap. Keeping the wheels clear of the ground, connect the battery to the receiver. The drive wheel and steering servo will operate briefly.
6. Attach the truck body and lock it into position. Ensure it is the correct number for the receiver.
7. Carefully place the model inside the operating area.
8. Place a trailer in the operating area.
9. Repeat operations 5 to 7 for each model.
10. Coin and test each playing position in turn to ensure the console truck and trailer operate correctly.

The unit is now ready for use.

1.02 Closing Instructions

1. Whilst the model is still inside the playing area, remove the body and disconnect the battery.

   Caution!
   It is vital that the battery is disconnected whilst the model is in the playing area. If the model is placed on a table or work surface with the battery connected it is possible that it could drive off the surface and fall to the floor. Damage caused in such a way is not covered by the guarantee.
2. Take the model to the charging/storage area and remove the battery from the model.
3. Invert the chassis and gently shake it to remove any accumulated dust and grit.
4. Using polish and a cloth thoroughly clean the body.

5. Place the chassis and body in their storage position.

   Note!
   The bodies should be stored either on the chassis or singularly. To avoid damage to the tops they should not be stored stacked on top of each other or on their roofs.
6. Repeat operations 1 to 5 for each model.
7. Turn off the Power Supply and check that all of the lights on the consoles are off.
8. Open the cash doors (remove the pad locks if fitted) and remove the cash. Note the coin counter readings.
9. Lock the cash doors and thoroughly clean and polish the consoles and playing positions. Place the covers over the consoles.
10. Place the used batteries in the charger. Check the charging meter readings. The needle should be between 2 and 10.

2.00 Detail Overview of the System

2.01 Consoles

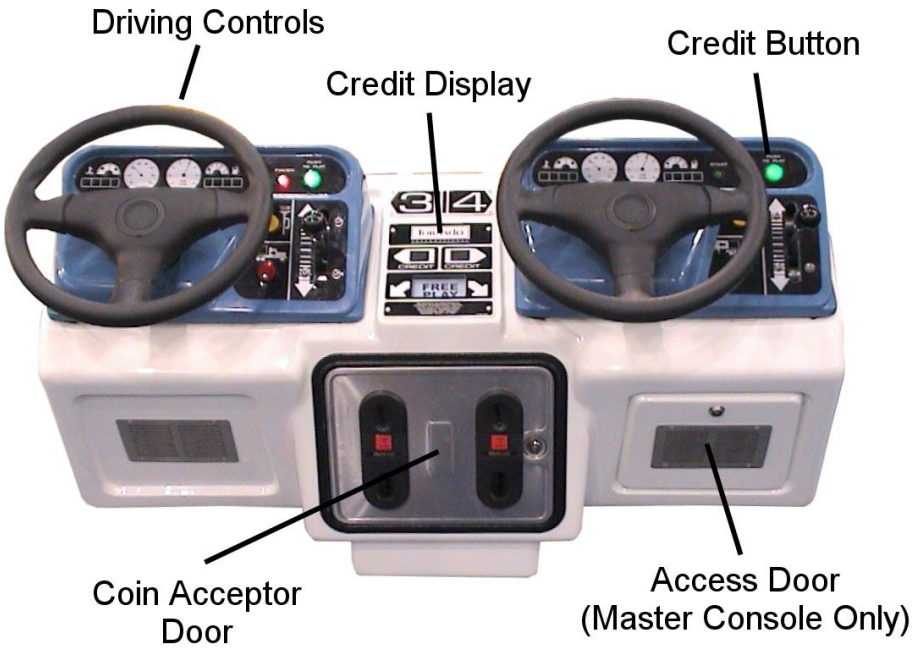

The consoles are made from glass fibre with a blockboard reinforcing for the back wall. Regular application of a quality proprietary polish will reduce the harmful effects of sunlight. The console should be thoroughly cleaned at the end of the operating period and before any soiling is allowed to dry. Never use any abrasive cleaner on the console. Housed in every console are the following components:

Driving Controls
Coin Acceptors
Credit Displays
Console Mother Board (& coin counters)
Cash Box
Slave Timer

Additionally the master console contains:

The Transmitter Mother Board
The Transmitter
The Loop Output Board
The Master Timer

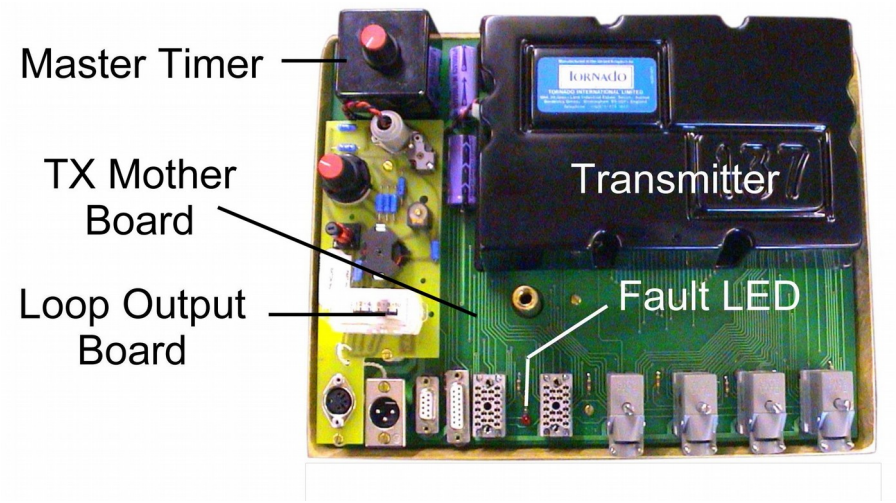

The master console can be identified by the provision of an additional door to the right of the coin acceptor door. It is usually console number 5/6.

The consoles are provided with covers, which should be used over night and if it rains during the day. A canopy over the consoles is advised to allow your customers to use the attraction during inclement weather or provide shade if the equipment is sited in sunny climates.

The coin acceptor doors and the transmitter access door are all fitted with radial pin tumbler locks. They all open with the same key. Provision is made for the use of your own padlock to secure the cash box if required.

2.02 Coin Acceptors

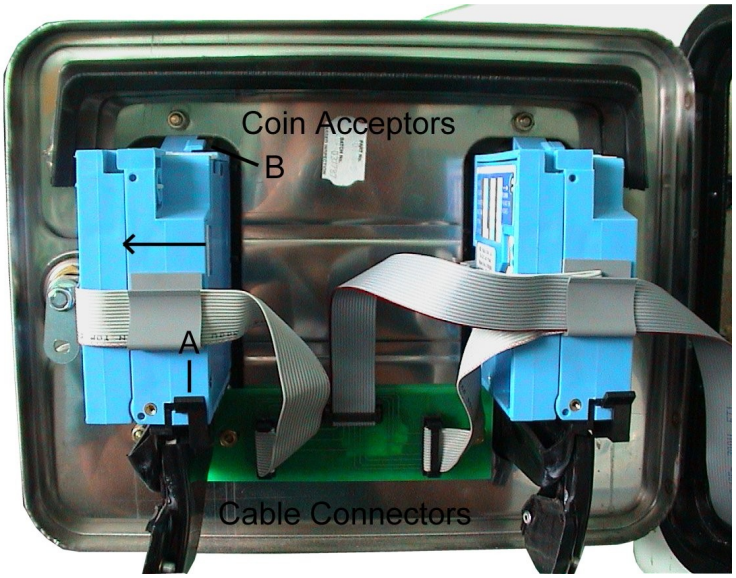

Microcoin electronic coin acceptors are fitted to the unit. These can be reprogrammed by the operator using a hand held programmer. This is available from Tornado either to purchase or on loan. Please contact the Service Department for details. There are no user serviceable parts in the coin acceptors. They should be returned to Tornado for service.

2.03 Credit Display

The credit display is mounted between the driving controls. It will show “0” on power up and will then display the number of credits purchased by the customer. The cost of each game and any bonus games are displayed in accordance with the settings programmed in the coin acceptors. As soon as one or more credits are available the green play button and the credit display will flash. When the play button is pressed 1 will be subtracted from the credit display, the display will stop flashing, the play button will be illuminated and a signal will be sent to the slave timer to start the game. Whilst the game is in play, pressing the green play button has no effect. At the end of the game the green play button and the credit display flash, if credits are available.
Any over payment which does not reach the next vend price is stored and added to the next payment. For example, if the vend price is 75p and a customer inserts 100p one credit will be displayed and 25p stored. The excess payment is kept in store until either some more money is inserted or the unit is turned off.

Note!
Removing power from the system when credits are available will result in the credits being lost.

2.04 Coin Counters

The coin counters (Diagram 2.06) are mounted on the console motherboard. They can be seen when the coin acceptor door is open. The counter is advanced by one digit for the value of the smallest coin the coin acceptors are programmed to accept. So if the smallest coin is a 5p the coin counters will count in multiples of 5p.
The coin counters are non re-settable.

Note!
Although each coin counter counts the coins for its own acceptor, the cash box serves two acceptors and is not separated.

2.05 Cash Box

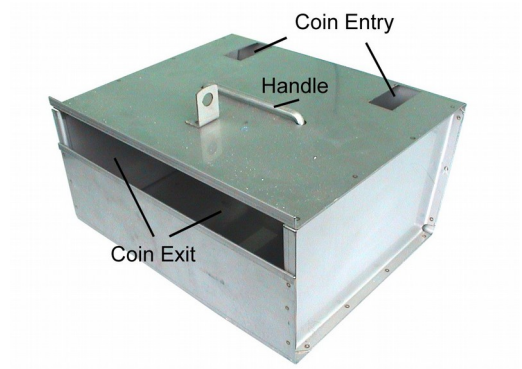

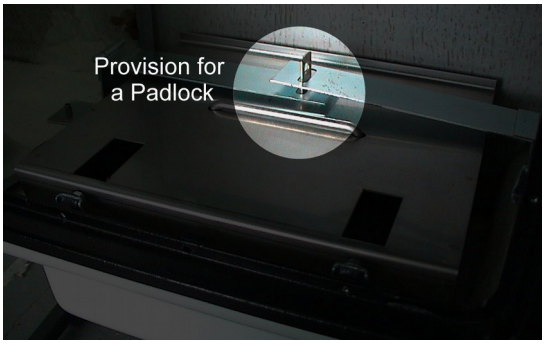

The cash box is mounted in the centre of the console behind the coin acceptor door. There is provision to fit your own pad lock for added security. The cash box is removed from the console by opening the coin acceptor door, removing the padlock if fitted and lifting out using the handle.

Caution!
Care should be taken to avoid damage to the console motherboard or coin acceptors when removing or replacing the cash box.

The coins can be poured out of the cash box into a suitable container by use of the slot in the rear of the box.

Caution!
When replacing the cash box, ensure it is correctly located before closing the Coin Acceptor door.

2.06 Console Motherboard

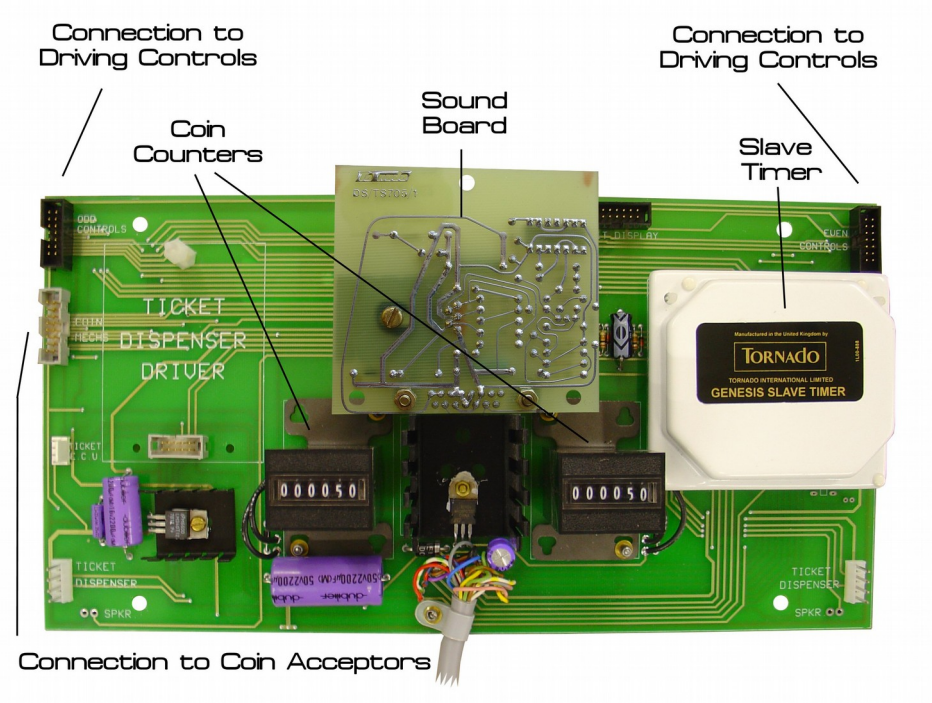

The console motherboard is mounted in the centre of the console and is accessed by opening the coin acceptor door. It is the distribution centre for the console and has the following parts mounted on it.

Sound Board
Slave Timer
Coin Counters

And connections for the following

Console Connecting Cable
Driving Controls
Credit Display
Coin Acceptors

2.07 Sound Board

The sound board is mounted on the console motherboard. One board provides the sound for two playing positions. The sound is produced via a speaker mounted under each playing position. The sound board is used to produce the horn and end of go warning.

2.08 Slave Timer

The slave timer (Diagram 2.06) is mounted on the console motherboard. Each slave timer serves two playing positions. It is essentially two timers in one case. The slave timer performs the following functions.

Receives the signal from the credit display to start the game.
Turns the red stop light off and the green start light on.
Transfers model control from internal fixed resistors to the driving controls.
Counts the timing pulses generated by the master timer and distributed by the console connecting cable.
When it has received the required number of pulses, control is removed from the driving controls, the end of go sounder is operated, the lights are reversed and a signal is sent to the credit display.

Note!
If the unit is switched off during play, the game will be lost.

2.09 Driving Controls

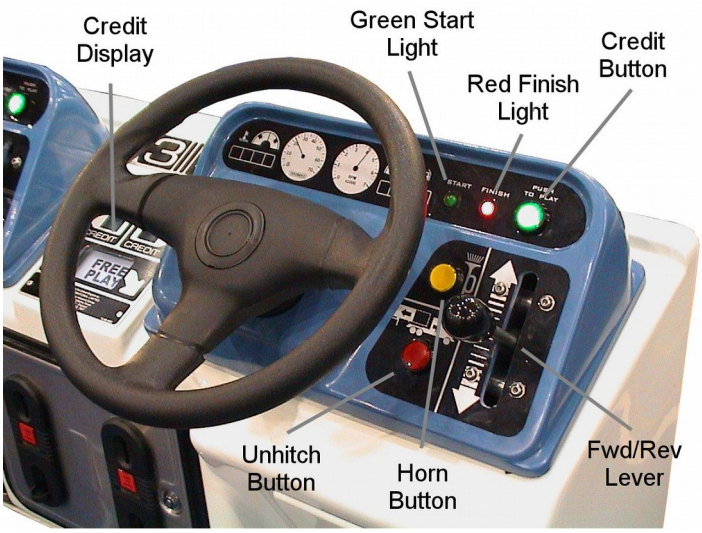

The driving controls are mounted on top of the console and comprise of a control for each function of the model. Each model uses two channels of the transmitter for its operation. One for steering and one for forward or reverse. All of the controls effect the operation of the model by altering the resistance across one or more channels of the transmitter.

Caution!

For correct operation of the model it is vital that the receiver and drive motor in the chassis are connected correctly with the correct polarity.
With the steering wheel in the centre position (and the console in the play state) moving the forward/reverse control from natural to the forward position alters the speed of the drive motor from crawl to full speed in the direction selected. The model will move faster the further the control is moved from natural. If the steering wheel is turned to the left or right, the steering servo (a small motor and gearbox mounted inside the receiver case) will turn the steering wheels in the desired direction. The angle of the front wheels on the model is proportional to the position of the playing position steering wheel. This precision of control is called proportional control and gives your customer the most easily controlled model in the industry.

2.10 The Transmitter Mother Board

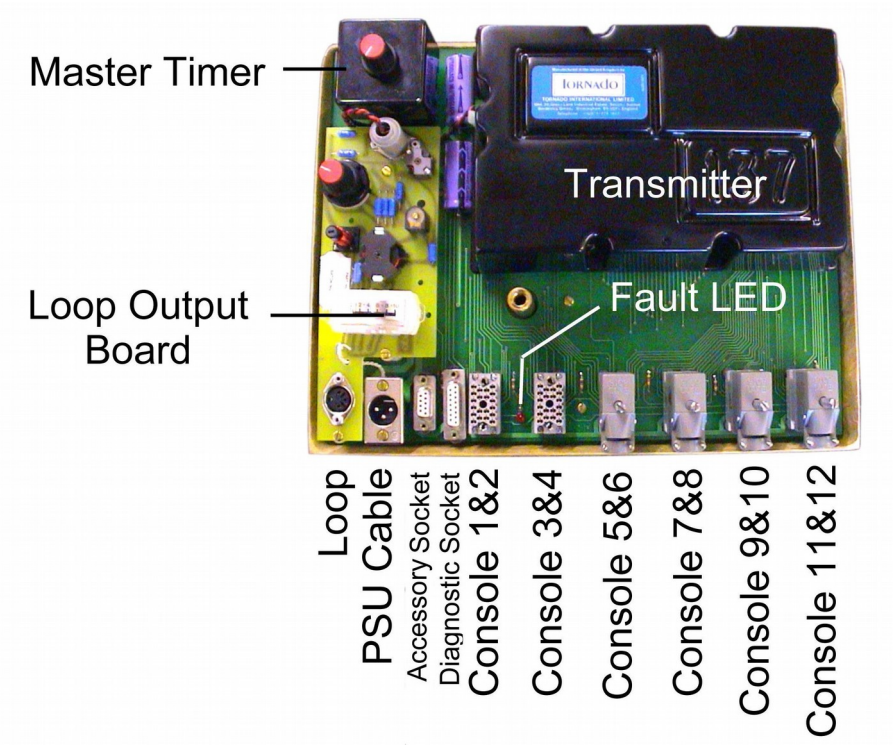

The transmitter motherboard is housed in the master console behind a glass fibre cover. It is accessed by opening the door under the driving controls and removing the glass fibre cover, through the coin acceptor door. Mounted on the transmitter motherboard are the following components

The Transmitter
The Loop Output Board
The Master Timer
The Console Connection Sockets & LED Fault Indicator
24 volt Power Supply (PSU) Cable Socket
Diagnostic Socket
Accessory Socket

2.11 The Transmitter (TX)

The TX (Diagram 2.09) runs all of the time that the system is turned on. The transmitter repeatedly broadcasts frames of information. Each frame consists of one long sync pulse followed by 48 shorter pulses. Each of the shorter pulses length is determined by the position of the driving controls (or fixed resistors in the slave timer if the model is not in use). One pulse is transmitted for each channel and four channels are allocated for each model. Only two channels are used, the other two are available for future product development. All channels are transmitted even if your particular set has less than 12 models.

Note!
If your set has less than 12 models it is essential that shorting plugs are fitted to all unused console sockets on the transmitter motherboard. The red “fault” LED will light if any socket is empty.

The signal produced by the transmitter is fed to the Loop Output Board to be matched to the length of the loop wire. The transmitter is a mature and reliable design. It is often tempting to assume the TX is the culprit during fault finding, experience shows this is rarely the case.

Caution!
Always turn the power off at the power supply before removing the transmitter. Failure to do so will lead to serious damage to the transmitter.

Note!
If you operate more than one type of Tornado equipment, you may have transmitters for the other equipment which look very similar. All items supplied in the spares pack should only be used with the equipment for which they were supplied.

2.12 Loop Output Board

The loop output board (Diagram 2.09) is located next to the transmitter, on the transmitter motherboard. To operate efficiently all transmitters have to have an aerial which is of a specific length. (Or equal divisions of that length). Normally the manufacturer determines the length during development and makes the aerial accordingly. In the case of our equipment however, the length of the aerial is determined by the perimeter of the model area. Clearly there is a conflict of requirements and this is overcome by the use of the loop output board. This assembly matches the length of loop wire (the aerial) to the transmitter. This is achieved by changing the capacitance of the circuit. The procedure of matching the length of the loop wire to the transmitter is called "Tuning the Loop" and should only be required during installation, if the size of the operating area is changed or exceptionally if the loop wire is changed. Tuning the loop is not required if the transmitter is changed for the supplied spare.

Caution!

Operating the system with the loop partially or incorrectly tuned will lead to poor model performance and damage to the transmitter and receivers.

The loop output board has a secondary function; that of providing a loop output meter which is used to tune the loop and check on the performance of the transmitter during service.

2.13 Tuning the Loop

This unit is fitted with a self tuning loop board. No manual tuning required.

2.14 The Master Timer

The master timer (Diagram 2.09) is mounted on the transmitter motherboard. It produces a constant stream of pulses whilst the unit is turned on. The gap between the pulses is controlled by the knob mounted on the front of the unit. The slave timer (mounted in each console) counts a fixed number of pulses to determine when to end the game. By varying the gap between pulses the time taken to send (and therefore count) a given number of pulses also varies. In this way the length of the game is altered. Rotating the knob fully anti-clockwise sets the shortest time and clockwise the longest. Changing the setting during play will lead to a proportional change in that (or those) games. The pulses are distributed to the slave timers via the console connection cables. If the pulses should not be sent (or not arrive) the slave timer will not end the game.

2.15 The Console Connection Sockets

These are mounted along the bottom of the transmitter motherboard (Diagram 2.09). They are numbered to correspond with the console numbers.

Note!
If your set has less than 12 models it is essential that shorting plugs are fitted to all unused console sockets on the transmitter motherboard. The red “fault” LED will light if any socket is empty.

2.16 24V Power Socket

This is mounted at the bottom of the transmitter motherboard (Diagram 2.09). It is the connection for the power supply lead. The power is distributed to the rest of the system via the console cables.

2.17 Diagnostic Socket

This is provided for the use of Tornado service engineers. Do not connect to this socket.

2.18 Accessory Socket

This is provided for the attachment of Tornado accessories. Instructions will be provided with the accessory.

2.19 The Power Supply Unit

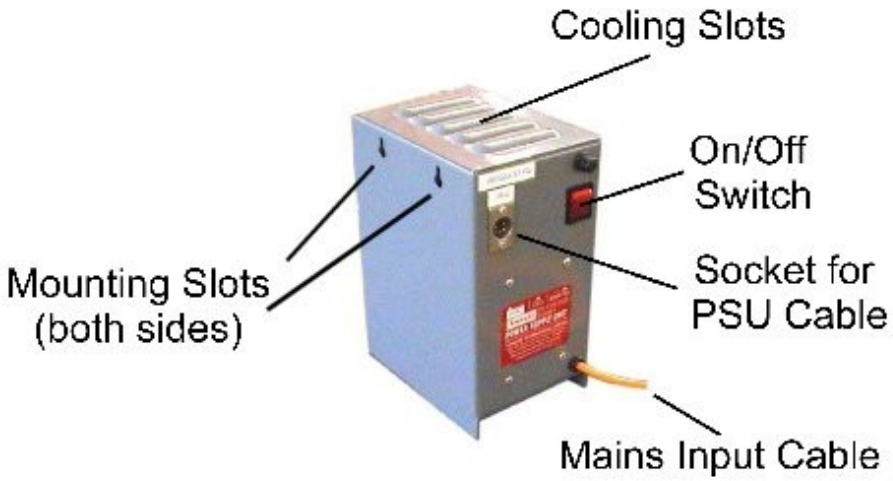

The power supply converts local mains voltage (100-120v or 220-240v AC) to 24volts AC. This to ensure the safety of the players. A power switch, fuse and output socket are located on the front of the unit. It is this power switch which is used to turn the set on and off.

Warning!
Risk of personal injury or damage to the equipment. Only use the power supply supplied by Tornado for this equipment.

Caution!
Always replace the power supply fuse with one of identical type and rating.

The power supply is designed to be operated only in locations which are protected from water.

Caution!
Ingress of water will lead to severe damage to the power supply.

Caution!
It is important to ensure that there is sufficient ventilation to provide an adequate flow of cooling air through the slots in the top and bottom of the unit.

2.20 The Power Supply Lead

The PSU lead is used to connect the power supply to the transmitter motherboard in the master console. It is fitted with a different socket at each end. The socket at each end must be fully inserted into the plug and the catch checked to ensure it is correctly latched. A damaged power supply lead should be replaced.

Caution!
The power supply lead must not be lengthened without reference to the Tornado technical department.

2.21 The Battery Chargers

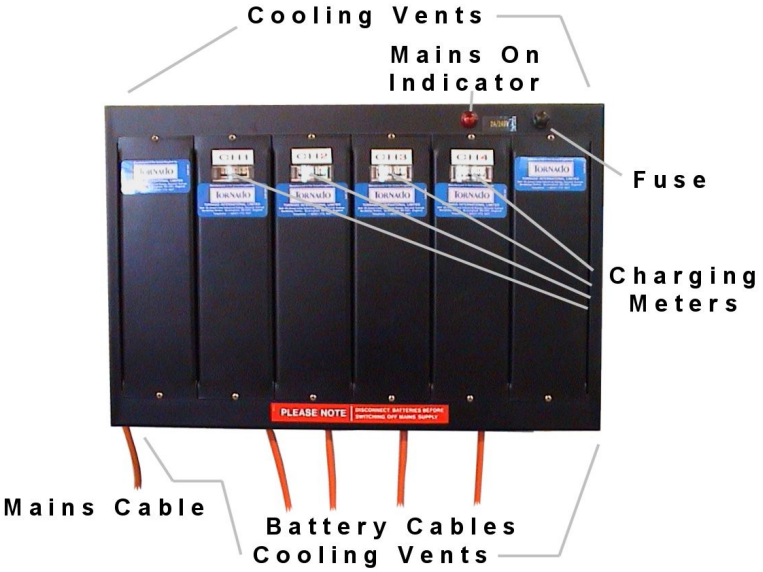

The battery charger is constructed from an outer case to which a number of charging modules are fitted. The case is used to house the modules and distribute power to them. The case has cooling vents at the top and bottom.

Caution!
Risk of fire. It is important to ensure that there is sufficient ventilation to provide an adequate flow of cooling air through the vents on the top and bottom of the battery charger case.

The battery chargers are designed to be wall mounted. A suitable shelf of sufficient strength to hold the batteries should be provided under the chargers within reach of the battery cables. To allow for correct ventilation, the shelf should not be closer to the bottom of the charger than 150mm. The battery chargers are fully automatic and require no setting by the operator. There is a fuse on the case and a charging meter on each module.

Caution!
Risk of fire. Always replace the battery charger fuse with one of identical type and rating.

To improve reliability the modules are fully independent. When a discharged battery is connect to the charger the charging meter will read between 4 and 10 depending how discharged the battery is. The more discharged the battery the closer the meter will be to 10. During the charging process the meter will slowly descend towards 0. When the battery is almost charged the charger changes to trickle charge. The meter will then be between 0 and 1.

Tip!
Before disconnecting the batteries from the charger or when placing the batteries on charge, always check the meter reading. This ensures that the batteries are ready for service or are connected to the charger as required.

When connecting the batteries to the charger be careful to correctly align the two halves of the red and black connectors. Do not force the connectors together and never disconnect them by pulling on the cables. It is not

necessary to switch off the charger when connecting or disconnecting the batteries.

2.22 The Batteries

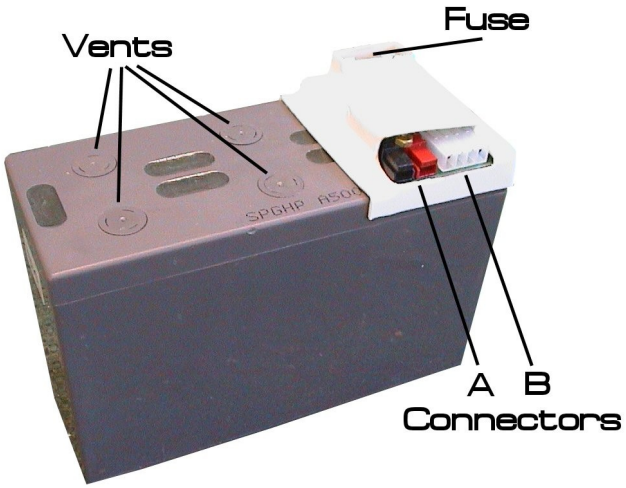

The batteries are of the sealed lead acid type. Please read the following information before use.

Warning!
Risk of fire. The batteries are capable of producing very high currents for a considerable time. Never place the batteries in a position which might allow the terminals to be shorted by a conducting material.

Warning!
Risk of fire. The protection fuse must only be replaced with a fuse of identical type and rating.

Warning!
Risk of personal injury. The batteries contain lead and a gel which contains sulphuric acid. Never use a battery with a damaged case.

Caution!
A damaged battery must be treated with care. Handle only with protective clothing. Dispose of in accordance with local laws.

Caution!
The battery vents must not be removed for any reason. The battery is maintenance free and water must not be added. Removal of the vents or the addition of water to the cells will invalidate the warranty.

If your set is fitted with red and black battery connectors to the chargers and receivers (connector A in the above diagram) **do not remove the white cover over connector B**.

Always treat a battery with respect. Not only is it expensive, it is vital to the correct operation and therefore profitability of the equipment. It should be considered as an energy store and like any concentration of energy it is only safe when used correctly. A battery should only be used for its intended purpose. It should never be used as a doorstop or support block etc. Staff should be given training to recognise and deal with a damaged battery.

There are two batteries supplied with each model. This allows one to be used whilst the other is on charge.

Tip!
Before use, separate the batteries into two sets. On the end opposite the connectors, label one set “A” and the other “B”. Then number the A and B sets, 1 to 12 (or however many models are in your set). Always use set A or set B together and place the battery in the model and charger with the same number. There are two advantages to this system. If the batteries need to be changed during the operating day, it is easy to see which batteries have been changed. Additionally if there is a battery problem the possible culprit is narrowed to one battery, one boat and one charger.

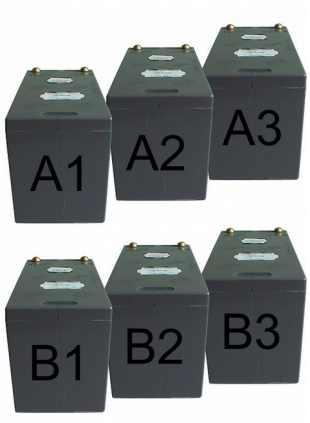

Always keep the battery contacts clean. The next section deals with charging the batteries and the associated subject of battery life.
It must be understood that batteries are an expendable item and in this respect are similar to the tyres and brakes on your car. They will benefit from correct use and be permanently damaged by misuse or inappropriate charging regimes. There are three areas where you can have a direct effect on the overall life of the battery. These are: Charging, Use and Storage.

Before we examine the factors relating to battery life, this vital fact must be appreciated.

Every rechargeable battery leaves the manufacturer with a finite life!

This life is usually expressed in terms of charge/discharge cycles. Each time a battery is charged and discharged a part of the battery life is used up and cannot be replaced.

Charging
It is vital to use a quality charger. The Tornado charger supplied with your unit has been tested by the battery manufacturer and is approved by them for use with the dry-fit batteries supplied. Do not charge the batteries with any other charger and do not use the Tornado chargers on other batteries. The batteries should be charged at the end of each operating period even if the unit has only had a little use.
Repeated under charging will lead to reduced battery capacity and premature failure. With this in mind it is important to charge the battery fully after each use and this will normally be achieved by overnight charging. Incomplete charging can be diagnosed by charger meters which are not at “0 or 1” at the start of the operating period and a gradual and progressive reduction of the batteries capacity, as evidenced by a reduction in the number of games the batteries achieve. If these symptoms are accompanied by late closing and early opening times then steps must be taken to avoid the premature failure of the batteries due to undercharging. Always monitor the models performance and change the batteries if the models speed is visibly reduced. Place the used batteries on charge immediately. The charging regime you use will depend on your specific site and pattern of use. However the goal is the

same, to ensure that the batteries are fully charged before the next time they are used. As a rule the most discharged set of batteries should be charged overnight. During the operating season there should always be one set of batteries in the charger.

Use

When fitting and removing the batteries handle them with care. Avoid dropping them into the model or onto the floor. Dropping the battery will cause the plates to deform with the result that some cells will become useless. Do not allow the model to be used with discharged batteries. Customer satisfaction will be reduced as will the battery life. Change the battery or remove the model from service as soon as the models speed is visibly reduced. Do not part charge and re-use the batteries as this will lead to premature failure.

Storage

If the unit is to be removed from service the correct storage of the batteries is vital. As soon as the batteries are removed from service they should be charged for 24hours. They should then be stored in a FROST-FREE place and be charged for 24hours each month of storage.

Caution!

Failure to follow these instructions will result in permanent damage to the batteries.

Summary

1. Only use the chargers supplied.
2. Charge the batteries at the end of each operating period.
3. Do not allow repeated undercharging.
4. Remove batteries from service before they are completely discharged and recharge immediately.
5. Charge for 24hours before storage and recharge for 24hours for each month of storage.
6. Store in a FROST-FREE place.
7. Handle the batteries with care.
8. Keep the terminals clean.
9. Do not remove the vents, or add water to the cells.

The batteries are expensive. It pays to look after them!

2.23 The Models

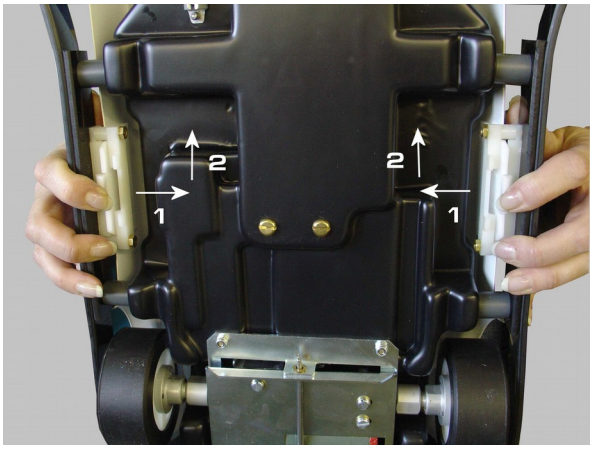

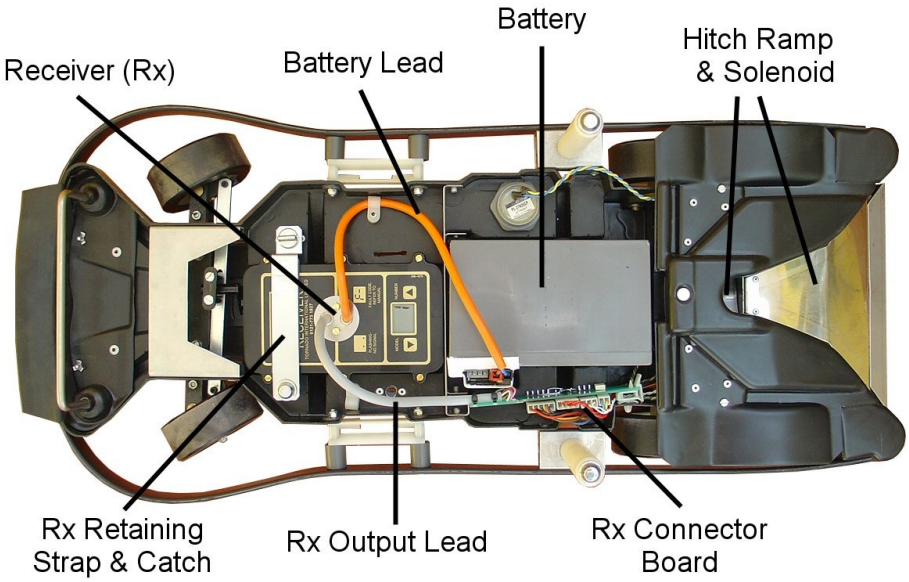

The model chassis are moulded from polypropylene. It is very tough and is largely unaffected by temperature fluctuations. The bodies are produced from UV stabilised PVC. Regular application of a quality proprietary polish will reduce the harmful effects of sunlight. The model should be thoroughly cleaned as soon as it is removed from the playing area and before any soiling is allowed to dry. Never use any abrasive cleaner on the model. The body is removed by holding the chassis as in the diagram above, placing your fingers on the release tabs (1 in the diagram) and then pushing the tabs inward and upward (2 in the diagram). The body will spring off the chassis.

Note!
Ensure the body does not fall to the floor after its removal. To avoid scratches and damage to the graphics, do not store by stacking the bodies on top of each other.

Note!
Do not unclip the body from just one side and then twist the body to one side to gain access to the chassis. This will cause premature failure of the body which is not covered by the guarantee.

The model contains the following components:

The Drive Motor and Gearbox.
The Receiver
The Battery
The Hitch Ramp

2.24 The Drive Motor & Gearbox

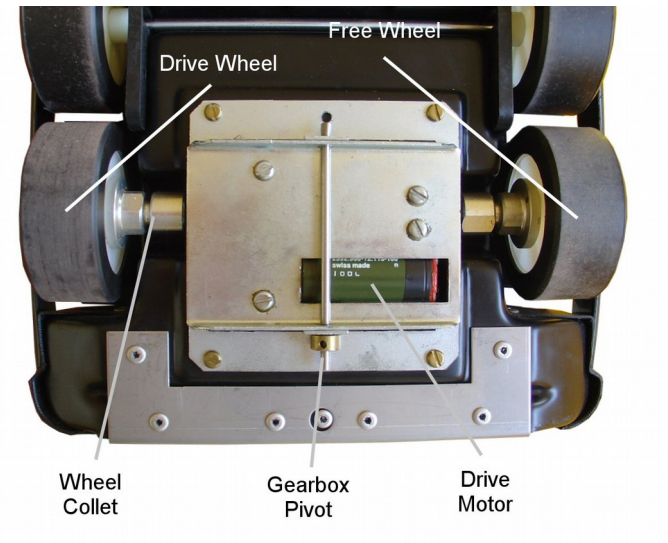

The model is propelled by a custom designed motor and gearbox. The motor is of the ironless core rotor type. This type of motor is very efficient, using very little current for a given output. All of the shafts and gears in the gearbox are carried on ball races. These features give the model exceptional running time on a battery charge. Only one of the rear wheels is driven. The other being carried on a ball raced lay shaft. This arrangement reduces drag when cornering which again reduces battery drain. Reduced current consumption prolongs battery life and therefore reduces the management time required by the attraction. The whole gearbox is carried on a pivoting plate to keep the drive wheel in contact with the ground. The rear wheels are retained by a locknut and collet system. This provides secure mounting for the wheels whilst being easy to remove without damage to the axles for service. The free wheel also carries a speed sensor. This is used to control the reduced speed in reverse. This feature is incorporated to give the driver more time to react to the model when reversing with a trailer. The speed feedback system varies the power supplied to the motor in order to keep the reversing speed constant under varying terrain and load conditions.

2.25 The Receiver (RX)

The receiver is mounted in the front of the model. For increased reliability it is produced using surface mount components on an automatic production line. It is housed in a custom designed water-resistant case.

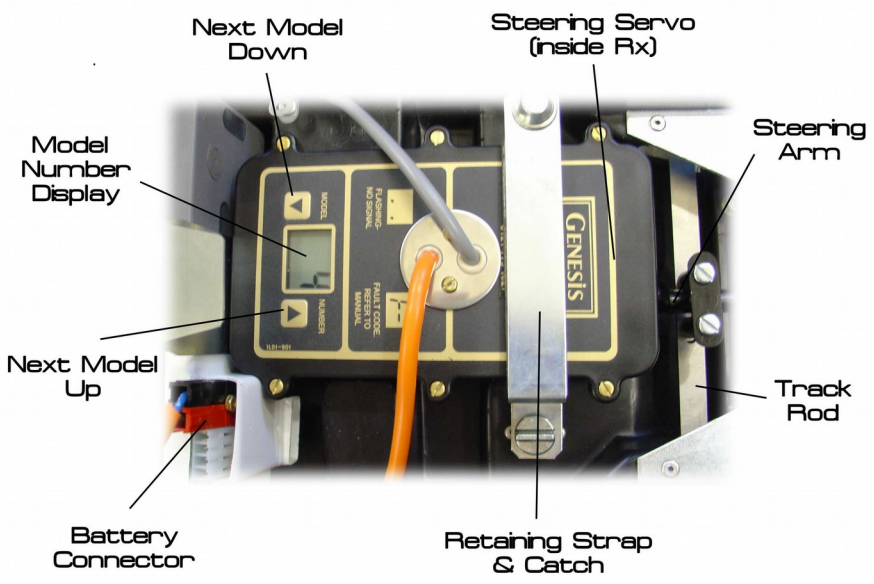

Its function is to receive the signal from the transmitter, interpret the signal and control the actions of the model via the drive motor, steering servo and unhitch solenoid. It does this by inspecting each frame of information sent by the transmitter. Each frame starts with a long synchronisation pulse. The receiver sees this and starts counting the control pulses. There is one control pulse for each channel, and four channels allocated to each model. It counts the control pulses ignoring them until it arrives at the pulses for the model it is controlling. It then switches the drive motor, steering servo and unhitch solenoid according to the length of the relevant pulses. Genesis trucks do not use the last pulse allocated to each model so the receiver ignores it. The receiver than shuts down until the next sync pulse is received when the procedure is repeated. This happens 15 times every second.

Mounted on the top of the receiver are the model selector buttons and a display. During use the display will show the number of the model the receiver is set to control, or fault codes if a fault has been detected. It will also indicate if the receiver is not receiving a signal from the transmitter.

The receiver can be set to operate any model by pressing the up or down model selector buttons during use. The display will roll round when it reaches 1 or 12. On powerup the display will show the receiver type followed by the number the receiver was last set to.

Due to its modular design and custom designed case, the receiver may be repaired in the field by competent technicians.

Note!

To comply with the terms of the guarantee any part or assembly which requires repair or replacement must be returned to Tornado International Ltd. without being opened or disassembled. The guarantee period is 1 year from the date of shipment.

To change the receiver proceed as follows:
Release the retaining strap catch by rotating the catch in either direction one quarter of a turn. Rotate the retaining strap away from the receiver case.
Disconnect and remove the battery. Release the battery cable from it's retaining clip.
Disconnect the motor connector over the gearbox (Diagram 2.23). Release the motor cable from it's retaining clip.
Lift the rear of the receiver and remove it from the chassis.
To replace the receiver reverse the above procedure. Ensure that the steering arm is correctly inserted into the black track rod moulding and that the receiver is set to the correct model number.

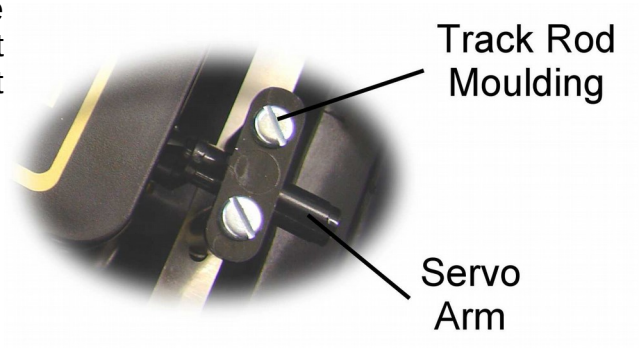

2.26 Fitting the Battery to the Chassis

Tip!
This section contains information regarding the fitting of batteries into the chassis. For information about the batteries themselves and how to charge them see the section 2.21 the Batteries.

To fit the battery into the chassis, carefully place a fully charged battery into the chassis in the position indicated by the diagram. Then with the model in the operating area and the wheels clear of the ground connect the Orange battery lead to the battery, being careful to align the connector with the correct socket.

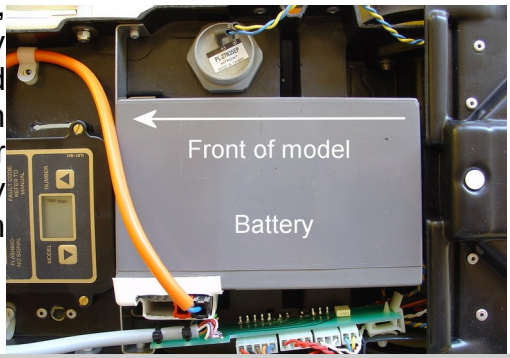

Note!
The battery should not be connected to the receiver unless the model is in the operating area and the consoles turned on.

Caution!
The model must not be placed on an elevated surface (table or work surface)with the battery connected. In the event of an uncommanded movement of the model it could drive off the surface and fall to the ground. This will almost certainly result in severe damage to the model and possible personal injury.

To remove the battery from the model proceed as follows. With the model in the operating area remove the body. Disconnect the battery from the receiver by gently pulling on the connecting plug.

Note!
The battery must not be disconnected by pulling on the cable. This will damage the cable and result in erratic and unreliable operation.
Remove the battery from the chassis and place on charge.

2.27 The Trailers

The trailer chassis are moulded from polypropylene. It is very tough and is largely unaffected by temperature fluctuations. The bodies are produced from UV stabilised PVC. Regular application of a quality proprietary polish will reduce the harmful effects of sunlight. The trailers should be thoroughly cleaned as soon as they are removed from the playing area and before any soiling is allowed to dry. Never use any abrasive cleaner on the trailer.

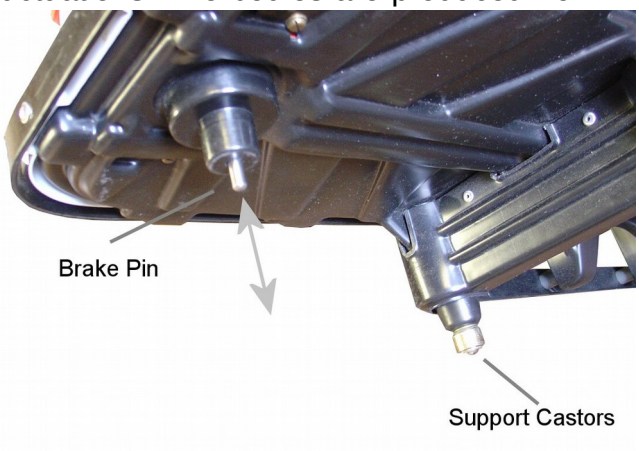

There is a trailer supplied for every Model. Although the trailers my have different bodies they all have the same chassis. Any trailer may be hitched to any model. To assist in the hitching and unhitching operation the rear wheel on the trailer have brakes fitted. These are operated by a metal pin on the underside of the hitch moulding. When the model reverses under the trailer the brake pin is pushed up into the trailer applying the brakes to hold the trailer in position, as the model pushes against it. When the hitching process is complete the brake pin drop's into a recess in the hitch ramp, securing the trailer to the model and releasing the brakes.
During the unhitch operation the reverse happens. On operation of the unhitching solenoid the brake pin is pushed up into the trailer, applying the brakes and releasing the trailer from the model. As the model drives away from the trailer the brakes continue to be applied as the trailer hitch disengages from the model. When the unhitch process is complete the trailer brakes are released.

2.28 Hitching and Unhitching the Trailers

The truck and trailer are connected together automatically when the truck is reversed under the front of the trailer. For the system to work correctly the truck and trailer must be in line and straight. Once the trailer is hitched to the truck they may be driven around and reversed in the same manner as a full sized articulated truck.
To unhitch the trailer the player simply presses the unhitch button (Dia 2.09) and drives the truck away from the trailer. If the unhitch button is pressed and the truck not driven away within 4 seconds, the unhitch solenoid is released and the truck remains attached to the trailer.

In the event of the truck and trailer being reversed and the trailer jack-knifes, the trailer will unhitch automatically allowing the trailer to move harmlessly away from the truck.

3.00 Periodic Service

3.01 Daily

Follow the procedures in “Operating Procedures – Opening and Closing instructions”.

3.02 Weekly

Inspect the chassis. Check that the wheels rotate freely and that there is no debris around the axles. The rear right hand drive wheel will have the drag of the gearbox when it is turned.
Thoroughly clean all of the models and consoles taking care to remove any stubborn marks which daily cleaning has missed.

3.03 Monthly

Clean and lightly lubricate with petroleum jelly the battery contacts.
Using light machine oil, lightly lubricate all of the locks and coin acceptor door hinges.

3.04 Annually

Check and clean if required the coin path through the coin acceptors.

Caution!
Do not immerse the coin acceptors in any fluid. Clean only the coin path using a cotton bud and a mild solvent.

Inspect the vents on the power supply unit. Ensure that it is clean and there is no restriction to the flow of cooling air.
Inspect the power supply, console connecting cables and loop wire for any damage.
Inspect the vents on the battery charger case. Ensure that they are clean and there is no restriction to the flow of cooling air.
Check all fasteners on the console and models and tighten or replace as necessary.
Check all the tyres on the models and replace if the tyre is worn beyond the bevel.

3.05 To Remove from Service

1. Follow the “Operating Procedures – Closing Instructions”.
2. In all cases perform all Weekly and Monthly maintenance checks.
3. Perform the Annual maintenance check if appropriate.
4. It is preferable to dismount the consoles for prolonged storage. If this is not possible fit the console covers making sure that they will not be dislodged by wind. Exposed locations may require additional covering to ensure adequate protection.
5. If the consoles are dismounted protect the loop plug by applying a coat of spray preservative oil and wrapping a plastic bag around the plug. Secure with insulation tape.
6. If the power supply lead cannot be removed, (It might be routed underground) apply a coat of spray preservative oil to the exposed plug and wrap a plastic bag around it. Secure with insulation tape.
7. As soon as the batteries are removed from service they should be charged for 24hours. After charging remove the batteries from the charger and unplug the charger. The batteries should then be stored in a FROST-FREE place and be charged for 24hours each month of storage.

Caution!
Failure to follow these instructions will result in permanent damage to the batteries.

3.06 To Return to Service

1. Charge all of the batteries for 24 hours.
2. If the consoles were dismounted, remount them. Take care not to damage any of the internal components or looms.
3. Route the console connecting leads to the master console and connect the plugs to their numbered sockets.
4. Inspect the loop wire and plug. Clean and then reconnect the plug to the socket on the loop output board.
5. Inspect the power supply lead, clean and then reconnect the lead to the plug on the transmitter motherboard and the power supply.
6. Turn the power supply on.
7. Check all of the red stop lights are on.
8. Check the operation of the coin acceptors by introducing coins. Check that each acceptor takes all of the programmed coins and that the credit display functions correctly.
9. Trigger each playing position in turn by pressing the green play button. Check that the credit display is reduced by one, and the red stop light is replaced by the green go light. Allow the playing positions to time out. Note the time and check to see that they all time out.
10. Place a model in the playing area. Insert and connect a fully charged battery. Check that the receiver display is showing the correct model number and then fit the body.
11. Trigger the playing position and drive the model. Repeat for each model.
12. Turn the power supply off, wait 30 seconds and turn it back on to reset all of the credit displays to zero.
13. Note the new coin counter start numbers.

The unit is now ready to use.

Fault Finding

Tornado International Ltd. has been manufacturing this type of equipment for over thirty years. The result is a well proven product which, by a combination of tried and tested designs and the best of modern technology, offers many years of profitable operation. However all things built by man can fail. This section is intended to guide you through the basics of fault finding on our equipment.

Foreword

Keep an open mind! When trying to fault find on the equipment look first at the simple things. Has any work been carried out on the equipment recently? Have any changes been made to the equipment? Have there been any unusual occurrences? It is always tempting to suspect the electronics, but it is most often something simple. A corroded connector, a broken or damaged wire or even, dare we say it, misuse by the operator.

The most important aspect of fault finding on the equipment is to observe and WRITE DOWN THE SYMPTOMS. This is true if you are going to fault find yourself and even more important if you are going to telephone Tornado for assistance. In nine cases out of ten, give us concise and full symptoms and we will accurately diagnose the problem. Take time to observe what happens when various actions are taken. When the red console stop light is on, when the green console start light is on. Drive the model and note what happens when driven in all directions and in all parts of the operating area. What happens if the receiver is changed for the spare, or the slave timer is changed? Each set is supplied with a comprehensive spares pack. It has two uses. One, to enable you to continue to operate after a failure and two, to help with fault finding by exchanging known good items for suspect ones.

Principles

At its simplest, the model is controlled by switching resistors of varying value across the channels controlling the model. If the red console stop light is on (i.e. the position is not in play) these are fixed resistors in the slave timer. When credits are available and the green play button is pressed, relays in the slave timer transfer control to the driving controls. When the forward/reverse control is moved a connected variable resistor alters the length of the transmitted control pulse. This in turn is interpreted by the receiver, which turns on the drive motor in the desired direction. From the above you will see that if the resistance of any of the circuits or wiring connected to the transmitter channels changes, the model will react accordingly.

For example, all of the models are in the playing area with all of the playing positions on stop. (Red light illuminated on the driving controls). All of the models will be stationary. If we disconnect the console connecting plug for console 1 & 2 we have changed the resistance across the channels for the first two models by presenting an open circuit to the transmitter. (We have also removed power from the console but that is academic for this example). The transmitter interprets this as a resistor change (which it is) and changes the length of the eight affected pulses (4 per model) accordingly. The receiver

then turns on the drive motors and moves the steering servos in accordance with the transmitted signal. The models will run in reverse with the steering turned to the right. If we were to apply a short to the same channels the two models would run forwards with the steering turned to the left. In summary, resistance controls the models. If the resistance of any channel is changed, intentionally or due to a fault, the model will move accordingly. We can use this movement and its direction to diagnose the possible fault.
There are numerous other systems in use by the equipment, but these are relatively conventional. It is faults in the transmission system which seem to be the most difficult to diagnose for those not familiar with the equipment.
Finally for diagnostic purposes, consider the unit as two separate sections. The console section and the model section. In all cases the first thing to do is to discover whether the problem is in the console or the model section. Be careful there are a lot of symptoms that are identical for faults in either section. Fortunately there is a relatively simple test. If a fault is observed in the operation of a model. Place a charged battery in the spare chassis and set the receiver to the same number as the affected model. Operate the suspect model and observe the good one. If both of the models react in the same manner the fault probably lies at the console end. If the good model reacts normally whilst the suspect model does not, the fault is in the model.

Technical help is available from Tornado International Ltd. during our office hours.

PLEASE HAVE AN ACCURATE AND COMPREHENSIVE LIST OF SYMPTOMS WHEN YOU CALL.